МУЗЦЕНТР
МУЗЫКАЛЬНОЕ ОБОРУДОВАНИЕ
https://muzcentre.ru

Thump12A • Thump15A

1300W Powered Loudspeakers

OWNER'S MANUAL

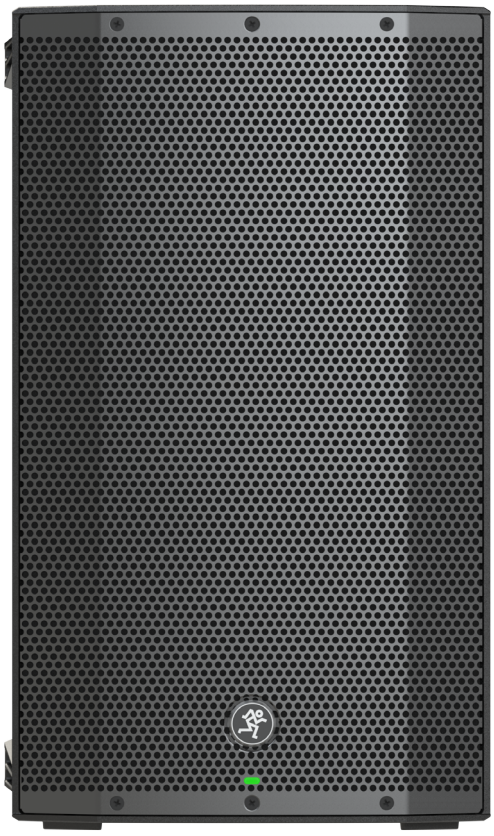

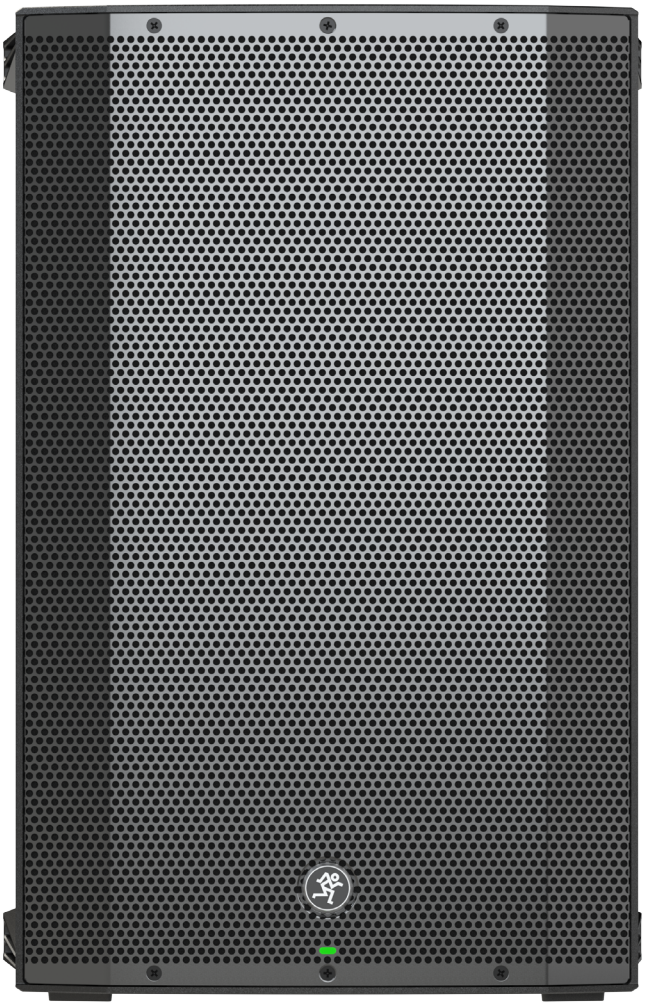

MACKIE®

Important Safety Instructions

1. Read these instructions.
2. Keep these instructions.
3. Heed all warnings.
4. Follow all instructions.
5. Do not use this apparatus near water.
6. Clean only with a dry cloth.
7. Do not block any ventilation openings. Install in accordance with the manufacturer's instructions.
8. Do not install near any heat sources such as radiators, heat registers, stoves, or other apparatus (including amplifiers) that produce heat.
9. Do not defeat the safety purpose of the polarized or grounding-type plug. A polarized plug has two blades with one wider than the other. A grounding-type plug has two blades and a third grounding prong. The wide blade or the third prong are provided for your safety. If the provided plug does not fit into your outlet, consult an electrician for replacement of the obsolete outlet.
10. Protect the power cord from being walked on or pinched particularly at plugs, convenience receptacles, and the point where they exit from the apparatus.
11. Only use attachments/accessories specified by the manufacturer.
12. Use only with a cart, stand, tripod, bracket, or table specified by the manufacturer, or sold with the apparatus. When a cart is used, use caution when moving the cart/apparatus combination to avoid injury from tip-over.

13. Unplug this apparatus during lightning storms or when unused for long periods of time.
14. Refer all servicing to qualified service personnel. Servicing is required when the apparatus has been damaged in any way, such as power-supply cord or plug is damaged, liquid has been spilled or objects have fallen into the apparatus, the apparatus has been exposed to rain or moisture, does not operate normally, or has been dropped.
15. This apparatus shall not be exposed to dripping or splashing, and no object filled with liquids, such as vases or beer glasses, shall be placed on the apparatus.
16. Do not overload wall outlets and extension cords as this can result in a risk of fire or electric shock.
17. This apparatus has been designed with Class-I construction and must be connected to a mains socket outlet with a protective earthing connection (the third grounding prong).
18. This apparatus has been equipped with a rocker-style AC mains power switch. This switch is located on the rear panel and should remain readily accessible to the user.
19. The MAINS plug or an appliance coupler is used as the disconnect device, so the disconnect device shall remain readily operable.

CAUTION

RISK OF ELECTRIC SHOCK! DO NOT OPEN!

CAUTION: TO REDUCE THE RISK OF ELECTRIC SHOCK DO NOT REMOVE COVER (OR BACK). NO USER-SERVICEABLE PARTS INSIDE. REFER SERVICING TO QUALIFIED PERSONNEL.

The lightning flash with arrowhead symbol within an equilateral triangle is intended to alert the user to the prescence of uninsulated "dangerous voltage" within the product's enclosure, that may be of significant magnitude to constitute a risk of electric shock to persons.

The exclamation point within an equilateral triangle is intended to alert the user of the prescence of important operating and maintaining (servicing) instructions in the literature accompanying the appliance.

WARNING — To reduce the risk of fire or electric shock, do not expose this apparatus to rain or moisture.

CAUTION — To prevent electric shock hazard, do not connect to mains power supply while grille is removed.

20. NOTE: This equipment has been tested and found to comply with the limits for a Class B digital device, pursuant to part 15 of the FCC Rules. These limits are designed to provide reasonable protection against harmful interference in a residential installation. This equipment generates, uses, and can radiate radio frequency energy and, if not installed and used in accordance with the instructions, may cause harmful interference to radio communications. However, there is no guarantee that interference will not occur in a particular installation. If this equipment does cause harmful interference to radio or television reception, which can be determined by turning the equipment off and on, the user is encouraged to try to correct the interference by one or more of the following measures:
    - Reorient or relocate the receiving antenna.
    - Increase the separation between the equipment and the receiver.
    - Connect the equipment into an outlet on a circuit different from that to which the receiver is connected.
    - Consult the dealer or an experienced radio/TV technician for help.

    CAUTION: Changes or modifications to this device not expressly approved by LOUD Technologies Inc. could void the user's authority to operate the equipment under FCC rules.
21. This apparatus does not exceed the Class A/Class B (whichever is applicable) limits for radio noise emissions from digital apparatus as set out in the radio interference regulations of the Canadian Department of Communications.

ATTENTION — *Le présent appareil numérique n'émet pas de bruits radioélectriques dépassant las limites applicables aux appareils numériques de class A/de class B (selon le cas) prescrites dans le réglement sur le brouillage radioélectrique édicté par les ministere des communications du Canada.*

22. Exposure to extremely high noise levels may cause permanent hearing loss. Individuals vary considerably in susceptibility to noise-induced hearing loss, but nearly everyone will lose some hearing if exposed to sufficiently intense noise for a period of time. The U.S. Government's Occupational Safety and Health Administration (OSHA) has specified the permissible noise level exposures shown in the following chart.

    According to OSHA, any exposure in excess of these permissible limits could result in some hearing loss. To ensure against potentially dangerous exposure to high sound pressure levels, it is recommended that all persons exposed to equipment capable of producing high sound pressure levels use hearing protectors while the equipment is in operation. Ear plugs or protectors in the ear canals or over the ears must be worn when operating the equipment in order to prevent permanent hearing loss if exposure is in excess of the limits set forth here:

Duration, per day in hours	Sound Level dBA, Slow Response	Typical Example
8	90	Duo in small club
6	92	
4	95	Subway Train
3	97	
2	100	Very loud classical music
1.5	102	
1	105	John screaming at Troy about deadlines
0.5	110	
0.25 or less	115	Loudest parts at a rock concert

Laite on liitettävä suojakoskettimilla varustettuun pistorasiaan.

Apparatet må tilkoples jordet stikkontakt.

Apparaten skall anslutas till jordat uttag.

Correct disposal of this product: This symbol indicates that this product should not be disposed of with your household waste, according to the WEEE directive (2012/19/EU) and your national law. This product should be handed over to an authorized collection site for recycling waste electrical and electronic equipment (EEE). Improper handling of this type of waste could have a possible negative impact on the environment and human health due to potentially hazardous substances that are generally associated with EEE. At the same time, your cooperation in the correct disposal of this product will contribute to the effective usage of natural resources. For more information about where you can drop off your waste equipment for recycling, please contact your local city office, waste authority, or your household waste disposal service.

Contents

Important Safety Instructions 2
Contents 3
Features 3
Introduction 4
How To Use This Manual 4
Getting Started 4
Things To Remember 4
Hookup Diagrams 5

Thump12A / Thump15A: Rear Panel Features 10
1. Power Connection 10
2. Power Switch 10
3. XLR and 1/4" Combo Inputs 10
4. Gain Knobs 11
5. Mix Out Output 11
6. Main Knob 11
7. Speaker Mode 11
8. Main LED Switch / Limit LED 12

Protection Circuitry 12
Limiting 12
Overexcursion Protection 12
Thermal Protection 12
AC Power 12
Care and Maintenance 12

Placement 13
Room Acoustics 13

Appendix A: Service Information 15
Appendix B: Technical Information 16
Thump12A / Thump15A Dimensions 17
Thump12A / Thump15A Frequency Response ... 18
Thump12A / Thump15A Block Diagram 19

Limited Warranty 20

Please write the serial numbers here for future reference (i.e., insurance claims, tech support, return authorization, make dad proud, etc.)

Purchased at:

Date of purchase:

Features

- Power
  - 1300 Watts of high quality, dynamic peak power amplification
  - Switch-mode power supply with Power Factor Correction (PFC) for optimal performance in any AC line condition
- Drivers
  - 12" low frequency, high output driver for deep bass response [Thump12A]
  - 15" low frequency, high output driver for deep bass response [Thump15A]
  - 1.4" titanium dome compression driver for extended high frequency response
- Dynamic DSP bass boost delivers maximum Thump regardless of output
- Complete system protection and performance optimization
  - Independent HF & LF RMS limiters protect drivers from excess heat and damage
  - Independent HF & LF peak limiters eliminate clipping and distortion
- Mackie 2-channel Wide-Z mixer and XLR though for daisy chain and subwoofer systems
- Simple, flexible user rear panel control
  - Four application specific speaker modes
  - Independent channel and master controls
  - Front LED on/off
- Durable, lightweight molded enclosure
  - Dual symmetrical monitor angles
  - Two full grip side handles plus top carry handle and bottom rear lift pocket
  - Rugged powder coated perforated steel grille with acoustically transparent cosmetic mesh
  - 29.1 lb / 13.2 kg
  - 34.8 lb / 15.8 kg

Like us

Follow us

Watch our dang videos

Part No. SW1200 Rev. A 06/17
©2017 LOUD Technologies Inc. All Rights Reserved.

Introduction

Delivering proven, chest-thumping low-end with Dynamic Bass Response™ technology in all-new, professional enclosures, the 1300W Thump™ loudspeakers take the series to a whole new level.

Get maximum versatility with built-in mixers and application-specific speaker modes. And for maximum room-shaking low-end, pair your Thump speakers with the 1200W Thump18S Subwoofer.

Redesigned from the ground up, these are our most flexible and powerful Thump loudspeakers ever with the class-leading performance you need.

How to Use This Manual:

After this introduction, a getting started guide will help you get things set up fast. The hookup diagrams show some typical Thump12A and Thump15A setups, including some that involve the Thump18S subwoofer.

This icon marks information that is critically important or unique to the subwoofer. For your own good, read and remember them.

Getting Started

The following steps will help you set up the loudspeakers quickly.

1. Make all initial connections with the power switches OFF on all equipment. Make sure the master volume, level and gain controls are all the way down.

2. If using a subwoofer, connect the outputs from the mixing console (or other signal source) to the inputs on the loudspeaker, then connect the mix out to the inputs of the subwoofers. Make sure the subwoofer's gain knob is set to "U" (unity gain).

3. If not using a subwoofer, connect the outputs from the mixing console (or other signal source) to the inputs on the rear panel of the loudspeakers.

4. Make sure the loudspeaker's gain knobs are set to (or near) "line".

5. Push the line cord securely into the subwoofer's/loudspeaker's IEC connectors and plug the other ends into grounded AC outlets. The subwoofer/loudspeaker may accept the appropriate voltage as indicated near the IEC connector.

6. Turn the mixer (or other signal source) on.

7. Turn the subwoofer on.

8. Turn the loudspeakers on.

9. Start the signal source and raise the mixer's main L/R fader up to a comfortably loud listening level.

Things to Remember:

- Never listen to loud music for prolonged periods. Please see the Safety Instructions on page 2 for information on hearing protection.

- As a general guide, the mixer (or other signal source) should be turned on first, subwoofers next, and Thump loudspeakers last. As such, the Thump loudspeakers should also be turned off first, followed by the subwoofers, then the mixer. This will reduce the possibility of any turn-on or turn-off thumps and other noises generated by any upstream equipment from coming out of the speakers.

- Save the shipping boxes and packing materials! You may need them someday. Besides, the cats will love playing in them and jumping out at you unexpectedly. Remember to pretend like you are surprised!

- Save your sales receipt in a safe place.

Hookup Diagrams

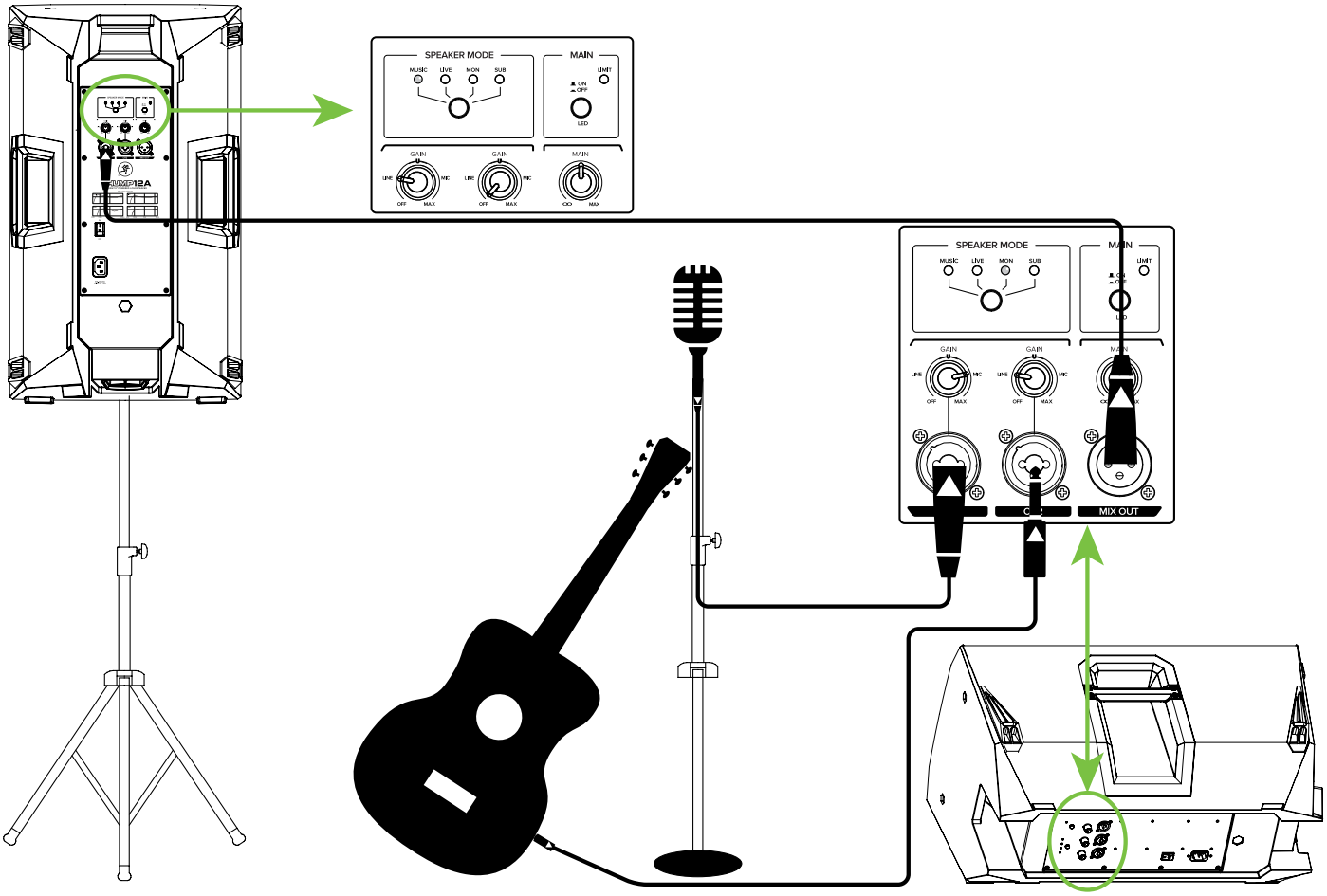

Thump loudspeakers are the perfect tool for singer-songwriters touring the local coffee shops. Bring your favorite axe and mic, Thump loudspeakers and cables and power cords.

In this example, a dynamic microphone is connected to the channel 1 input of a Thump12A loudspeaker, used for monitoring purposes. Be sure that the gain knob is set to "mic" in order to get an extra boost for the mic. If anything other than a microphone is attached to a channel input, make sure the gain knob is set to anything other than "mic" ["line" is a safe bet]. From there, adjust the gain as described on page 11.

Now grab your axe and plug it directly into the channel 2 input. Or if you use effects, connect the guitar to the effects input and another cable from the effects output to the channel 2 input. Set the channel two gain knob to "line".

Another Thump12A loudspeaker will be used for the main PA. Simply connect a cable from the Thump12A monitor's MIX OUT jack to the Thump12A PA's channel 1 input [gain knob set to "line"].

For the output, you will want to set a speaker mode, described in detail on page 11. For this type of setup, Music works well for the main Thump12A. However, don't count out the Live mode! It has a nice low cut and a brilliant high end. Select the Monitor mode for the Thump12A monitor.

Hookup Diagrams continued...

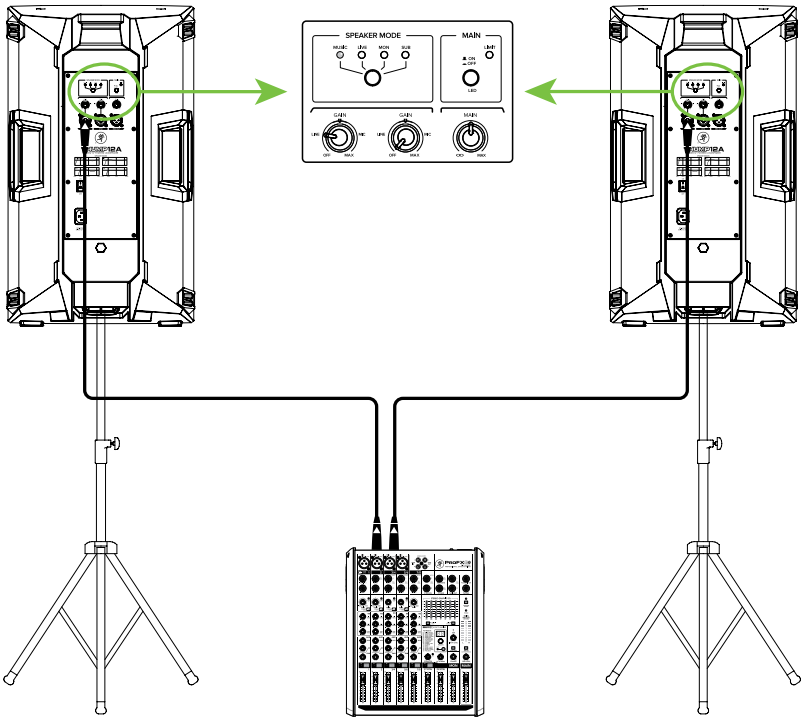

In this example, a ProFX8v2 mixer is connected directly to two Thump12A loudspeakers. It is the perfect setup for a small club. Simply connect the L/R outputs of the ProFX8v2 mixer to the CH1 input of each Thump12A loudspeaker. Don't forget to set the CH1 gains to 'Line' and the Speaker Modes to Music!

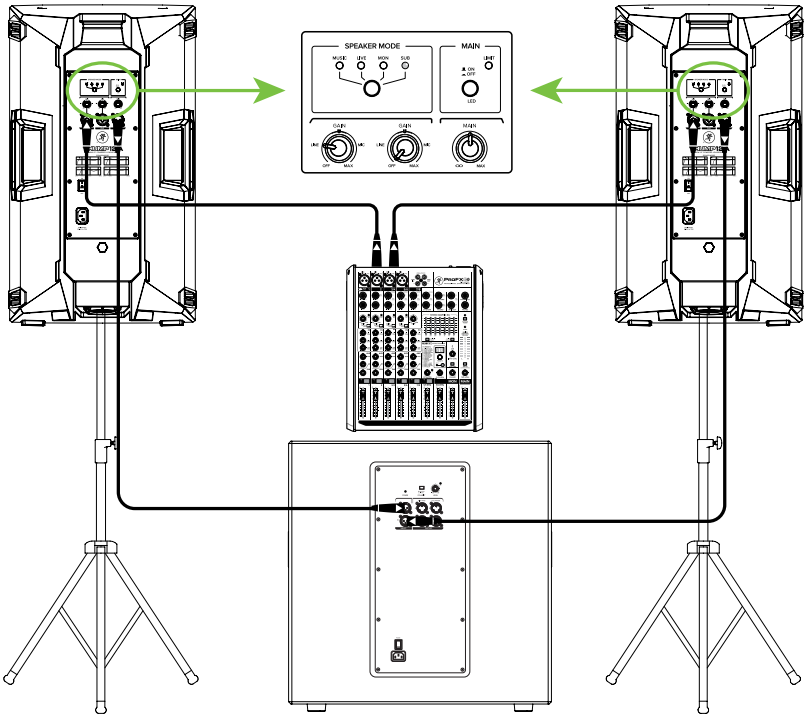

If you desire a little more boom, add a Thump18S subwoofer to the mix. Here, the L/R outputs of a ProFX8v2 mixer are connected directly to the CH1 inputs of each Thump12A loudspeaker. Then the Mix Out of each loudspeaker is connected to the channel A and B inputs of a single Thump18S subwoofer. Don't forget to set the CH1 gains to 'Line' and the Speaker Modes to Sub.

Small Club System

Hookup Diagrams continued...

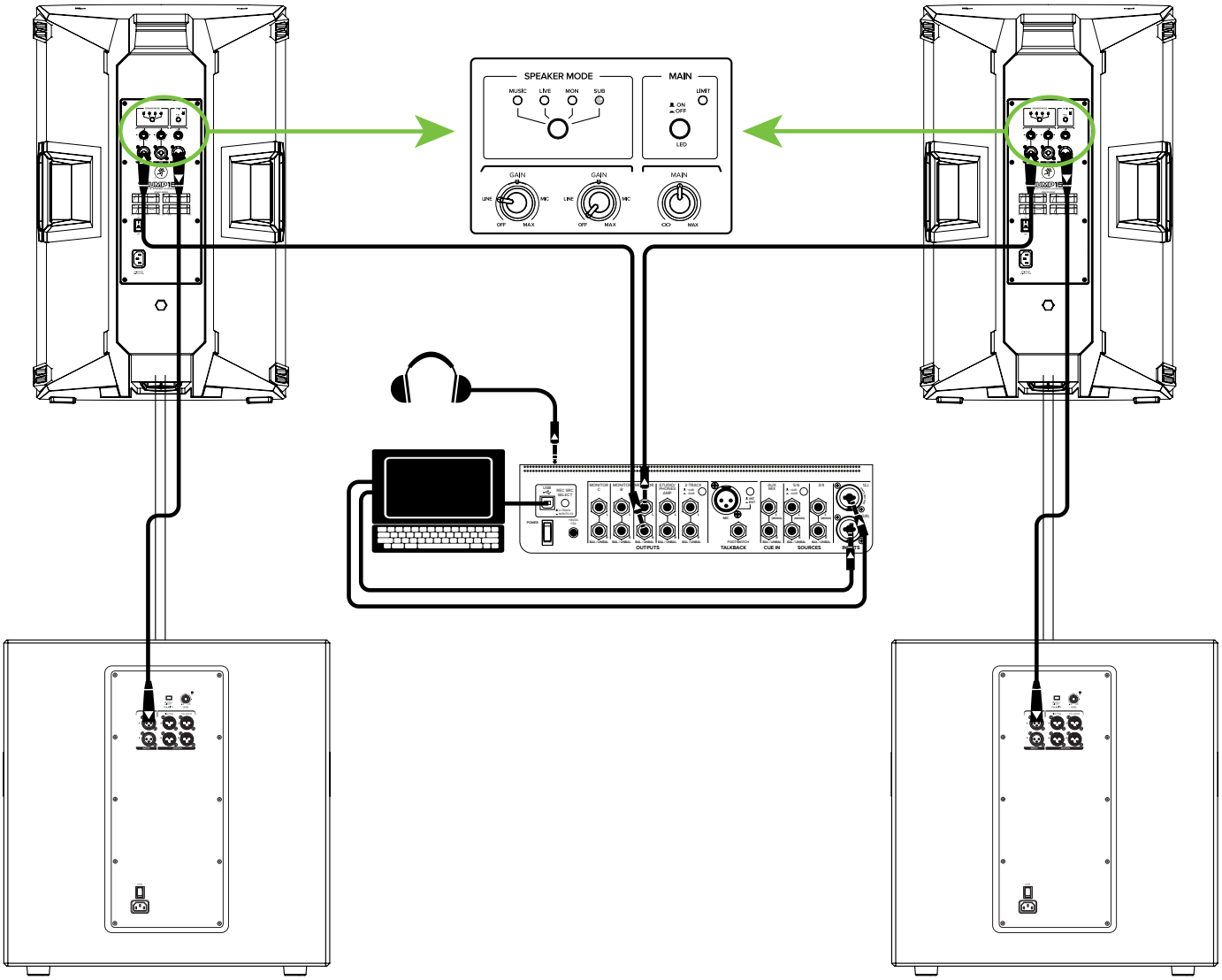

Perhaps you're a DJ playing bumpin' tunes in the middle of the night to a crowd that's groovin' and dancin' to your fine selection.

In this example, a laptop is connected to the channel 1 and 2 inputs of a Big Knob Studio+ and a set of headphones are connected to the phones jack.

The L/R Monitor A outputs of the Big Knob Studio+ are connected directly to the CH1 inputs of each Thump15A loudspeaker.

The Mix Out of each loudspeaker is connected to the channel A input of each Thump18S subwoofer.

The CH1 gains of both loudspeakers may be set to 'Line' and the Speaker Modes on both to Sub.

DJ System

Hookup Diagrams continued...

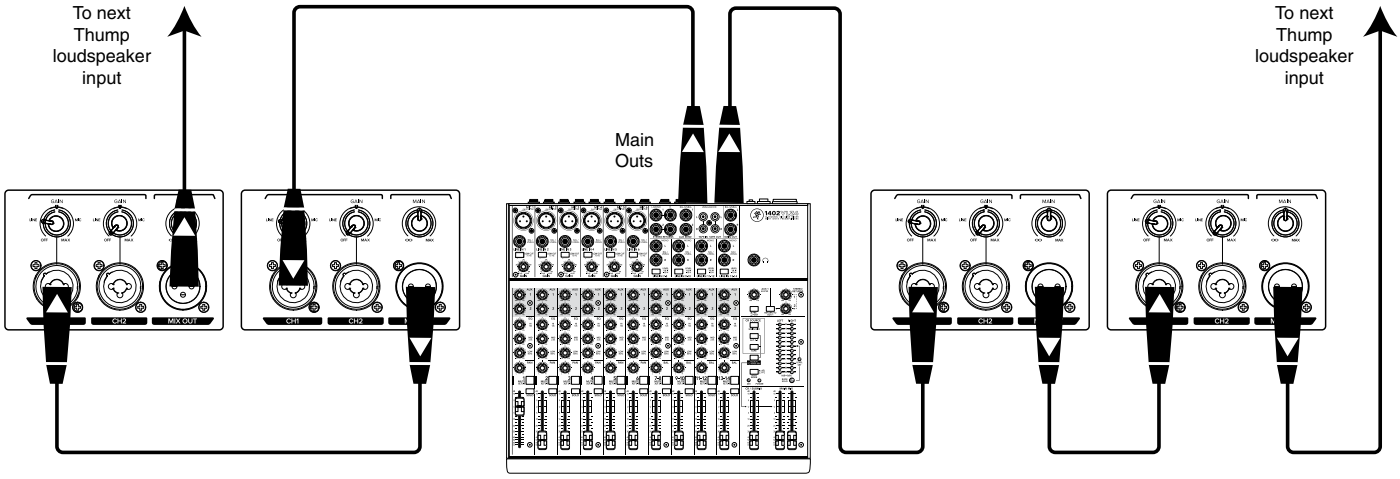

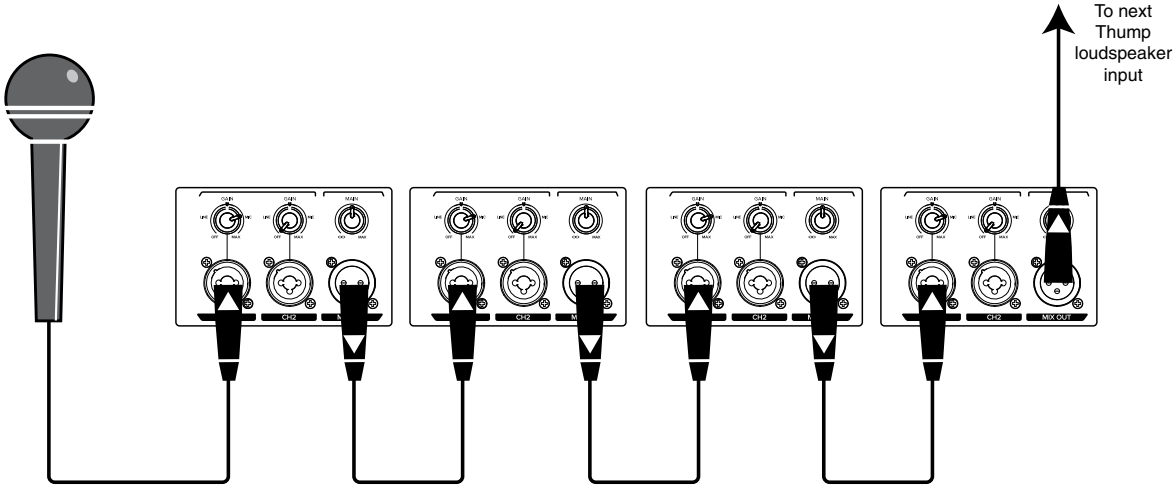

Thump loudspeakers may be daisy-chained via the male XLR connector labeled "MIX OUT". Simply plug the signal source (i.e., mixer output or microphone) into the input jack(s), and patch that loudspeaker's mix out jack to the next loudspeaker's input jack, and so on, daisy-chaining multiple Thump loudspeakers.

If daisy-chaining via mixer, set the gain knobs to Line. If daisy-chaining via microphone, set the gain knobs to Mic. See above for visual representations of daisy-chaining.

Daisy-Chaining Multiple Thump Loudspeakers

Hookup Diagrams continued...

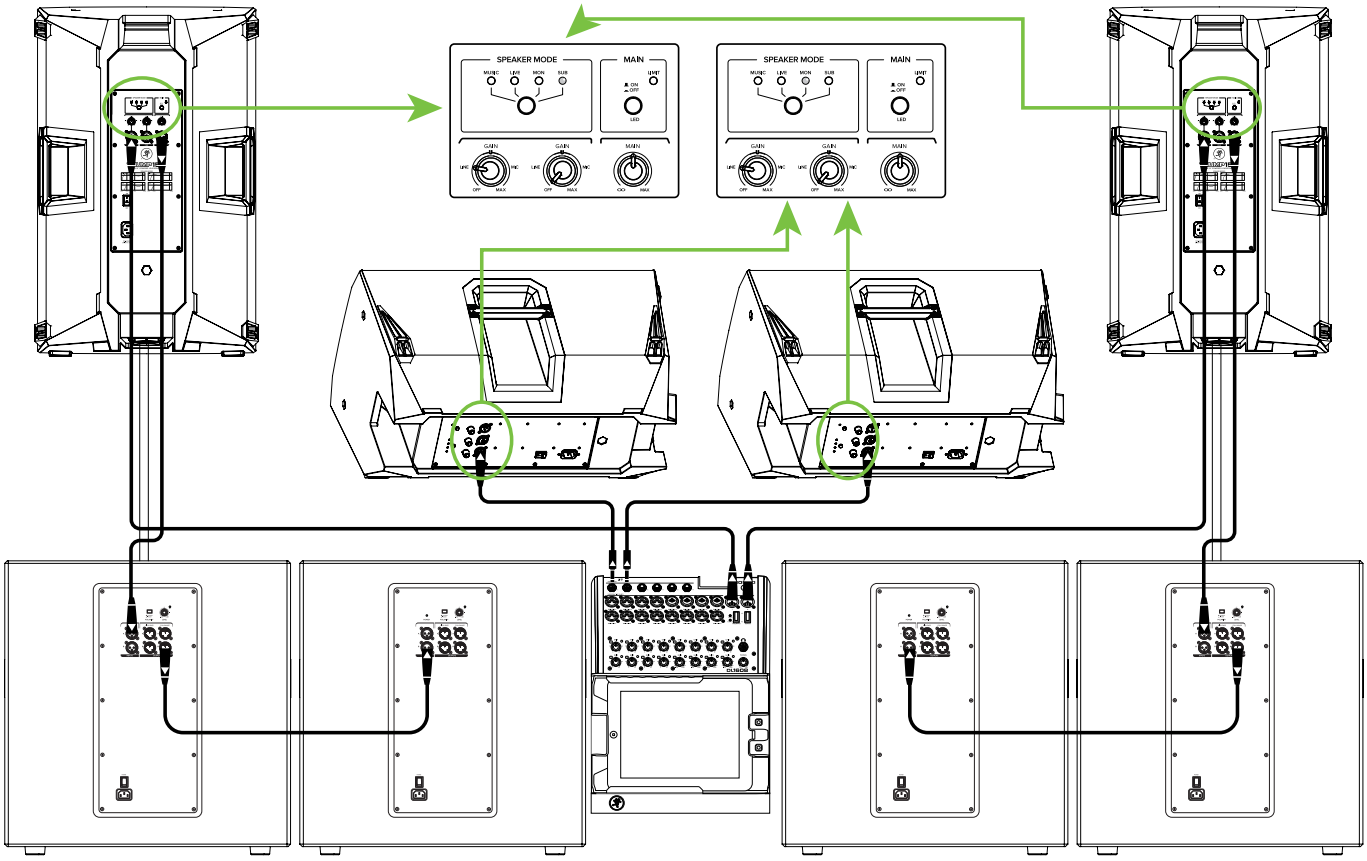

Here's how to set up a large club system. In this example, the L/R outputs of a DL1608 mixer are connected directly to the CH1 inputs of a pair of Thump15A loudspeakers. The CH1 gains of these PA loudspeakers may be set to 'Line' and the Speaker Modes on both to Sub.

The Mix Out of each loudspeaker is then connected to the channel A input of a pair of Thump18S subwoofers.From here, the channel A full range outputs of the two outer Thump18S subwoofers are connected directly to the channel A inputs of another set of Thump18S subwoofers. Talk about beefy low end!

The aux 1 and aux 2 sends from the mixer are connected directly to the CH1 inputs of a pair of Thump12A loudspeakers to be used as monitors for the band. The CH1 gains of the the monitor loudspeakers may be set to 'Line' and the Speaker Modes on both to Monitor.

Large Club System

Thump12A / Thump15A Loudspeakers: Rear Panel Features

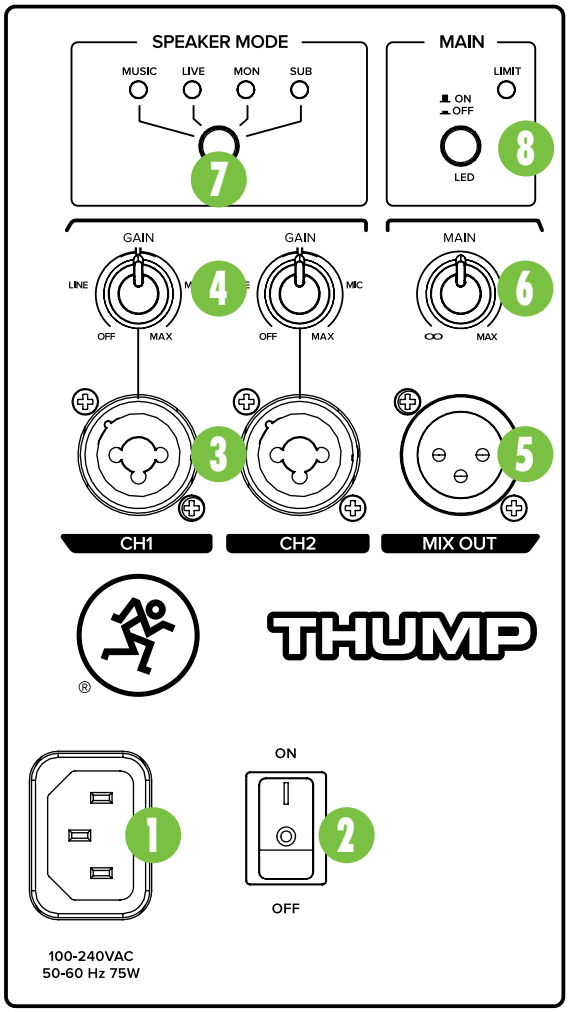

1. Power Connection

This is a standard 3-prong IEC power connector. Connect the detachable power cord (included in the packaging with the loudspeaker) to the power receptacle, and plug the other end of the power cord into an AC outlet.

VERY IMPORTANT — Make sure that the AC power is matched to the AC power indicated on the rear panel (below the IEC receptacle).

VERY IMPORTANT — Disconnecting the plug's ground pin is dangerous. Don't do it!

2. Power Switch

Press the top of this rocker switch inwards to turn on the loudspeaker. Press the bottom of this rocker switch inwards to turn off the loudspeaker.

VERY IMPORTANT — As a general guide, the mixer (or other signal source) should be turned on first, subwoofers next, and loudspeakers last. As such, the loudspeakers should also be turned off first, followed by the subwoofers, then the mixer. This will reduce the possibility of any turn-on or turn-off thumps and other noises generated by any upstream equipment from coming out of the speakers.

3. XLR and 1/4" Combo Inputs

Both input channels may accept a balanced mic signal using an XLR connector. They are wired as follows, according to standards specified by the AES (Audio Engineering Society).

XLR Balanced Wiring:

Pin 1 = Shield (ground)
Pin 2 = Positive (+ or hot)
Pin 3 = Negative (– or cold)

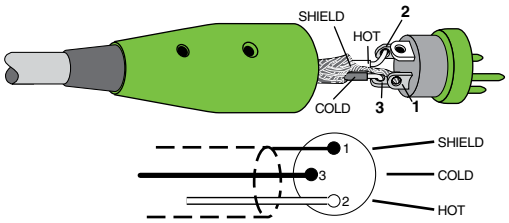

In addition to accepting a balanced mic signal using an XLR connector, these input channels may also accept 1/4" line-level signals driven by balanced or unbalanced sources.

Additionally, both input channels may accept Hi-Z sources (such as guitars) via the 1/4" input without the need for a separate DI box.

To connect balanced lines to these inputs, use a 1/4" Tip-Ring-Sleeve (TRS) plug. "TRS" stands for Tip-Ring-Sleeve, the three connection points available on a stereo 1/4" or balanced phone jack or plug. TRS jacks and plugs are used for balanced signals and are wired as follows:

1/4" TRS Balanced Mono Wiring:

Sleeve = Shield
Tip = Hot (+)
Ring = Cold (–)

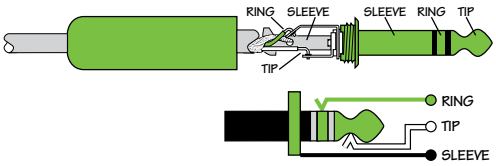

To connect unbalanced lines to these inputs, use a 1/4" mono (TS) phone plug, wired as follows:

1/4" TS Unbalanced Mono Wiring:

Sleeve = Shield
Tip = Hot (+)

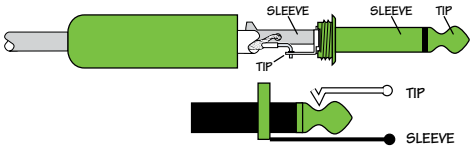

VERY IMPORTANT — NEVER connect the output of an amplifier directly to a Thump's input jack. This could damage the input circuitry!

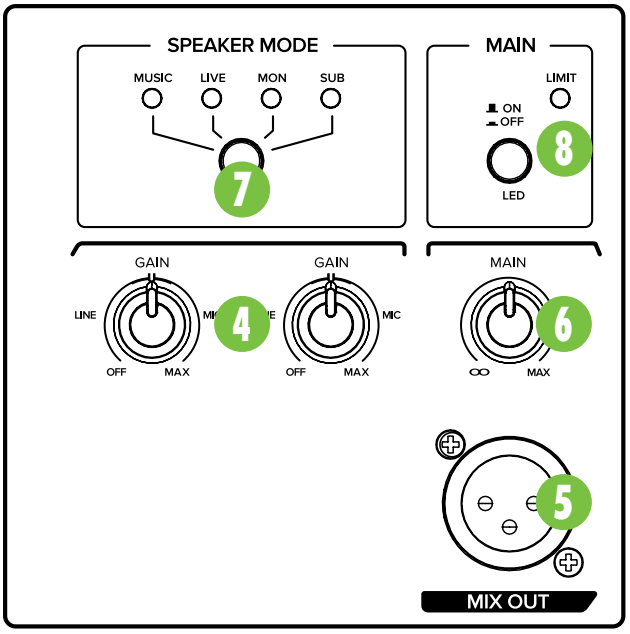

4. Gain Knobs

The gain knobs adjust the input sensitivity of the mic/line inputs. This allows signals from the outside world to be adjusted to run through each channel at optimal internal operating levels.

There is –∞ dB of gain with the knob fully down (off), ramping up to 50 dB of gain fully up (max).

If connecting mixer outputs to loudspeaker inputs, set the gain knob to 10:00 ["Line"] for optimal sound and performance.

5. Mix Out

This is a male XLR-type connector that produces exactly the same signal that is connected to the input jacks. Use it to daisy-chain several Thump loudspeakers together off the same signal source(s).

They are wired as follows, according to standards specified by the AES (Audio Engineering Society):

Balanced XLR Output Connector

Pin 1 – Shield (ground)
Pin 2 – Positive (+ or hot)
Pin 3 – Negative (– or cold)

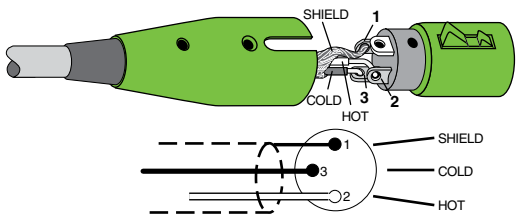

Balanced XLR Output Connector

See page 8 to learn more about daisy-chaining Thump loudspeakers.

6. Main Knob

The level knob adjusts the overall signal level at the input to the built-in power amplifiers. It ranges from Off (–∞) to MAX (maximum gain), with unity gain at the center position (12 o'clock).

• Thump loudspeakers are designed to operate with a +4 dBu signal when the main knob is at the center position.

• Thump loudspeakers may accept up to a +20 dBu signal by turning down the main knob accordingly. Turning the main knob past center position will provide enough gain to connect a microphone directly.

7. Speaker Mode

Here you are able to change the loudspeaker's speaker mode to tailor it to best suit your particular application. There are four modes: Music, Live, Monitor and Sub. Press the speaker mode button repeatedly until the LED of the speaker mode you desire is illuminated. Refer to the Frequency Response graphs on page 18 for further information.

MUSIC Speaker Mode – This mode is full range, but focuses on increased bass and brilliant high frequencies. This is the place to start for most DJ / music playback applications.

LIVE Speaker Mode – This mode features a low frequency roll-off to get rid of unwanted thumps and adds boost and sparkle to mid-range and high frequencies. This plug-and-play mode is perfect for singer-songwriters.

MON(itor) Speaker Mode – This mode features a low frequency roll-off and a reduction around 2 kHz to ensure maximum gain before feedback in monitor applications.

(With) SUB Speaker Mode – This mode rolls off the low end of the ThumpA loudspeaker to match properly with the Thump18S subwoofer.

Thump12A / Thump15A Loudspeakers: Rear Panel Features continued...

8. Main LED Switch / Limit LED

The LED on the front of the Thump loudspeaker illuminates when this switch is disengaged and AC power is available at the mains input. Engage the switch if you do not want the front panel LED to illuminate.

Thump loudspeakers have a built-in limiter that helps to prevent the amplifier outputs from clipping or overdriving the transducers. The limit indicator illuminates amber when the limiter is activated. It's okay for it to blink yellow occasionally, but if it blinks frequently or lights continuously, turn down the gain knob(s) until it only blinks occasionally.

VERY IMPORTANT

Excessive limiting may lead to overheating, which in turn trips the thermal protect circuitry and interrupts the performance. See 'Thermal Protection' to the right for more information.

Protection Circuitry

Thump loudspeakers employ a built-in limiter for less distortion at peak levels. A dynamic bass response circuit provides optimal low frequency response regardless of overall output level. Additional protection includes automatic thermal shutdown should the amp overheat. However, with Class-D amp technology, which is highly-efficient, this should never be a problem.

VERY IMPORTANT

The protection circuits are designed to protect the loudspeakers under reasonable and sensible conditions. Should you choose to ignore the warning signs [e.g. excessive distortion], you can still damage the speaker in the loudspeaker by overdriving it past the point of amplifier clipping. Such damage is beyond the scope of the warranty.

Limiting

The driver has its own compression circuit which helps protect it from damaging transient peaks. The compressor is designed to be transparent and is not noticeable under normal operating conditions.

Overexcursion Protection

A subsonic filter circuit just prior to the power amplifier prevents ultra-low frequencies from being amplified. Excessive low-frequency energy can damage the woofer by causing it to "bottom out," also know as overexcursion, which is equivalent to a mechanical form of clipping.

Thermal Protection

All amplifiers produce heat. Thump loudspeakers are designed to be efficient both electrically and thermally. In the unlikely event of the amplifier overheating, a built-in thermal switch will activate, muting the signal.

When the amplifier has cooled down to a safe operating temperature, the thermal switch resets itself, and the Thump loudspeaker resumes normal operation.

If the thermal switch activates, try turning down the level control a notch or two on the mixing console (or the back of the loudspeaker) to avoid overheating the amplifier. Be aware that direct sunlight and/or hot stage lights may be the culprit of an amplifier overheating.

AC Power

Be sure the Thump loudspeaker is plugged into an outlet that is able to supply the correct voltage specified for your model. It will continue to operate at lower voltages, but will not reach full power. Be sure the electrical service can supply enough amperage for all the components connected to it.

We recommend that a stiff (robust) supply of AC power be used because the amplifiers place high current demands on the AC line. The more power that is available on the line, the louder the speakers will play and the more peak output power will be available for a cleaner, punchier bass. A suspected problem of "poor bass performance" is often caused by a weak AC supply to the amplifiers.

VERY IMPORTANT

Never remove the ground pin on the power cord or any other component of the Thump loudspeaker. This is very dangerous.

Care and Maintenance

Your Thump loudspeakers will provide many years of reliable service if you follow these guidelines:

- Avoid exposing the loudspeakers to moisture. If they are set up outdoors, be sure they are under cover if rain is expected.
- Avoid exposure to extreme cold (below freezing temperatures). If you must operate the loudspeakers in a cold environment, warm up the voice coils slowly by sending a low-level signal through them for about 15 minutes prior to high-power operation.
- Use a dry cloth to clean the cabinets. Only do this when the power is turned off. Avoid getting moisture into any of the openings of the cabinet, particularly where the drivers are located.

Placement

Thump loudspeakers are designed to sit on the floor or stage as the main PA or as monitors. They may also be pole-mounted via the built-in socket on the bottom of the cabinet. Be sure the pole is capable of supporting the weight of the loudspeaker. The SPM200 is a great option when using a subwoofer.

WARNING: These Thump loudspeakers do not have rigging points and are not suitable for rigging. **NEVER** attempt to suspend a Thump loudspeaker by its handles.

Check to make sure that the support surface (e.g. floor, etc.) has the necessary mechanical characteristics to support the weight of the loudspeaker(s).

When pole-mounting loudspeakers, be sure that they are stabilized and secured from falling over or being accidentally pushed over. Failure to follow these precautions may result in damage to the equipment, personal injury, or death.

As with any powered components, protect them from moisture. Avoid installing the loudspeaker in places exposed to harsh weather conditions. If you are setting them up outdoors, make sure they are under cover if you expect rain.

Thump loudspeakers are NOT designed to array horizontally. If you feel you must put two speakers side-by-side, you should have a good understanding of the relationship between the splay angle (the angle between the facing sides of the cabinets) and frequency cancellation effects between cabinets.

When two cabinets are positioned side-by-side such that the rear-angled faces of the enclosures are parallel, the splay angle will be 90º. This matches the 90˚ horizontal coverage pattern of each individual loudspeaker; the interference between the two cabinets will be minimized, but the total coverage of 180˚ may be too wide for some applications. The mid and high frequencies may also be reduced for those in the center who are too close to the loudspeakers.

Reducing the splay angle will reduce the total horizontal coverage, but it also creates an area both speakers are covering. Instead of a nearfield hole, this will cause comb-filtering effects in the frequency response in the overlapping area. The smaller the splay angle, the more energy will be delivered on-axis, but the comb-filtering effects will get worse at the same time.

To reiterate, though, we strongly suggest NOT arraying these loudspeakers horizontally. Experimentation and experience will help you find the right balance for your application.

Room Acoustics

Thump loudspeakers are designed to sound fantastic in nearly every application.

But, room acoustics play a crucial role in the overall performance of a sound system. However, the wide high-frequency dispersion of the Thump loudspeakers helps to minimize the problems that typically arise.

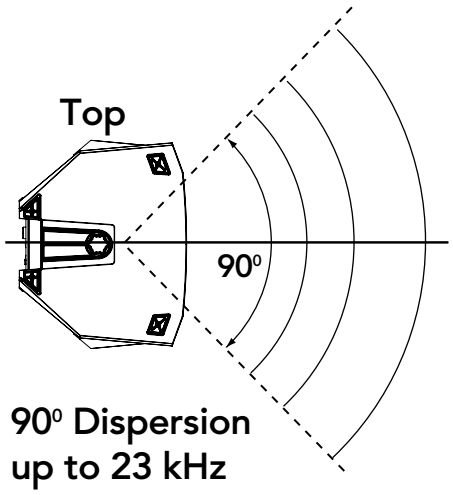

Here are some additional placement tips to help overcome some typical room problems that might arise:

- Placing loudspeakers in the corners of a room increases the low frequency output and can cause the sound to be muddy and indistinct.
- Placing loudspeakers against a wall increases the low frequency output, though not as much as corner placement. However, this is a good way to reinforce the low frequencies, if so desired.
- Avoid placing the speakers directly on a hollow stage floor. A hollow stage can resonate at certain frequencies, causing peaks and dips in the frequency response of the room. It is better to place them on a sturdy stand designed to handle the weight of the loudspeaker.
- Position the loudspeakers so the high-frequency drivers are two to four feet above ear level for the audience (making allowances for an audience that may be standing/dancing in the aisles). High frequencies are highly directional and tend to be absorbed much easier than lower frequencies. By providing direct line-of-sight from the loudspeakers to the audience, you increase the overall brightness and intelligibility of the sound system.

- Highly reverberant rooms, like many gymnasiums and auditoriums, are a nightmare for sound system intelligibility. Multiple reflections off the hard walls, ceiling, and floor play havoc with the sound. Depending on the situation, you may be able to take some steps to minimize the reflections, such as putting carpeting on the floors, closing draperies to cover large glass windows, or hanging tapestries or other materials on the walls to absorb some of the sound.

  However, in most cases, these remedies are not possible or practical. So what do you do? Making the sound system louder generally doesn't work because the reflections become louder, too. The best approach is to provide as much direct sound coverage to the audience as possible. The farther away you are from the speaker, the more prominent will be the reflected sound.

  Use more speakers strategically placed so they are closer to the back of the audience. If the distance between the front and back speakers is more than about 100 feet, you should use a delay processor to time-align the sound. (Since sound travels about 1 foot per millisecond, it takes about 1/10 of a second to travel 100 feet.)

Keep in mind that the speaker mode is a great way to compensate for some of these issues. See page 11 for more information.

Appendix A: Service Information

If you think your Thump loudspeaker has a problem, please check out the following troubleshooting tips and do your best to confirm the problem. Visit the Support section of our website (www.mackie.com/support) where you will find lots of useful information such as FAQs and other documentation. You may find the answer to the problem without having to part with your loudspeaker.

Troubleshooting

No power

- Our favorite question: Is it plugged in? Make sure the AC outlet is live [check with a tester or lamp].
- Our next favorite question: Is the power switch on? If not, try turning it on.
- Make sure the line cord is securely seated in the line cord socket and plugged all the way into the AC outlet.
- Is the power LED on the front panel illuminated? If not, make sure the AC outlet is live. If so, refer to “No sound” below.
- The internal AC line fuse may be blown. This is not a user serviceable part. If you suspect the AC line fuse is blown, please see the "Repair" section next.

No sound

- Is the level knob for the input source turned all the way down? Verify that all the volume controls in the system are properly adjusted. Look at the level meter to ensure that the mixer is receiving a signal.
- Is the signal source working? Make sure the connecting cables are in good repair and securely connected at both ends. Make sure the output level control on the mixing console is turned up sufficiently to drive the inputs of the speaker.
- Make sure the mixer does not have a mute on or a processor loop engaged. If you find something like this, make sure the level is turned down before disengaging the offending switch.
- Has it shut down? Make sure there is at least six inches of free space behind each Thump loudspeaker.

Poor sound

- Is it loud and distorted? Make sure that you’re not overdriving a stage in the signal chain. Verify that all level controls are set properly.
- Is the input connector plugged completely into the jack? Be sure all connections are secure.

Noise

- What is the position of the gain knob? It should be at (or near) “mic” when a mic is connected and at (or near) “line” when a line-level signal is connected. It should be “off” for all unused inputs.
- Make sure all connections to the active loudspeakers are good and sound.
- Make sure none of the signal cables are routed near AC cables, power transformers, or other EMI-inducing devices.
- Is there a light dimmer or other SCR-based device on the same AC circuit as the Thump loudspeaker? Use an AC line filter or plug the loudspeaker into a different AC circuit.

Hum

- Try disconnecting the cable connected to the input jack. If the noise disappears, it could be a “ground loop,” rather than a problem with the Thump loudspeaker. Try some of the following troubleshooting ideas:
  - Use balanced connections throughout your system for the best noise rejection.
  - Whenever possible, plug all the audio equipment’s line cords into outlets which share a common ground. The distance between the outlets and the common ground should be as short as possible.

Repair

For warranty service, refer to the warranty information on page 20.

Non-warranty service is available at a factory-authorized service center. To locate the nearest service center, visit www.mackie.com/support/service-locator. Service for Thump loudspeakers living outside the United States may be obtained through local dealers or distributors.

If you do not have access to our website, please call our Tech Support department at 1-800-898-3211 (normal business hours, Pacific Time), to explain the problem. They will tell you where the nearest factory-authorized service center is located in your area.

Appendix B: Technical Information

Thump12A / Thump15A Loudspeakers Specifications

Acoustic Performance

Frequency Range (–10 dB):	50 Hz – 23 kHz [Thump12A] 32 Hz – 23 kHz [Thump15A]
Frequency Range (–3 dB):	57 Hz – 20 kHz [Thump12A] 39 Hz – 20 kHz [Thump15A]
Horizontal Coverage Angle:	90º
Vertical Coverage Angle:	60º
Maximum SPL Peak:	126 dB [Thump12A] 127 dB [Thump15A]
Monitor Angle	45˚

Transducers

Low Frequency:	12 in / 305 mm [Thump12A] 15 in / 381 mm [Thump15A] with ferrite
High Frequency:	1.4 in / 36 mm Titanium dome compression driver

Power Amplifiers

System Power Amplification	
Rated Power	1300 watts peak
Low Frequency Power Amplifier	
Rated Power:	1000 watts peak
Rated THD	< 1%
Cooling	Convection
Design:	Class D
High Frequency Power Amplifier	
Rated Power:	300 watts peak
Rated THD	< 1%
Cooling	Convection
Design:	Class AB

Input/Output

Input Type:	2x Female XLR Balanced 1/4" Unbalanced
Mic-Line Impedance:	8 kΩ balanced
1/4" TS, Wide-Z™ Impedance:	1 MΩ unbalanced
Mix Out:	Male XLR Balanced
Mix Out Impedance:	600 Ω balanced
Main Control:	Rotating knob 0 dB at fully clockwise
Sensitivity:	+4 dBu for full output [Main Control at 12:00 / Channel at 12:00] +18 dBu [Main Control at fully clockwise / Channel at 9:00] –35 dBu [Main Control at fully clockwise / Channel at fully CW]

Electronic Crossover

Crossover Type:	24 dB/octave
Crossover Frequency:	2 kHz

Line Input Power

Detachable line cord	100 – 240 VAC, 50 – 60 Hz, 75W
AC Connector	3-pin IEC 250 VAC, 10 A male
Power Supply Type	Switchmode

Safety Features

Input Protection	Peak and RMS limiting, power supply and amplifier thermal protection
Display LEDs	Defeatable front power, input signal/OL, speaker mode, system limiter

Construction Features

Basic Design:	Trapezoidal
Material:	Polypropylene
Finish:	Black, textured finish
Handles:	One on each side, one each on top and bottom
Grille:	Perforated metal with weather-resistant coating
Display LEDs	
Front:	Power ON
Rear:	Limit
Operating Temperature:	0 – 40 ˚C 32 – 104 ˚F

Physical Properties

Thump12A:	
Height:	24.2 in / 615 mm
Width:	14.1 in / 358 mm
Depth:	14.0 in / 356 mm
Weight:	29.1 lb / 13.2 kg
Thump15A:	
Height:	27.0 in / 686 mm
Width:	17.4 in / 442 mm
Depth:	14.0 in / 356 mm
Weight:	34.8 lb / 15.8 kg

Thump Loudspeaker Specifications continued...

Mounting Methods:

Floor mount, pole mount via the built-in socket on the bottom of the cabinet [Be sure the pole is capable of supporting the weight of the Thump loudspeaker]. There are no rigging points and they are NOT suitable for rigging. Do not suspend a Thump loudspeaker by its handles.

Options

Thump12A Speaker Bag	P/N 2047360-09
Thump12A Rolling Speaker Bag	P/N 2047360-10
Thump15A Speaker Bag	P/N 2047360-11
Thump15A Rolling Speaker Bag	P/N 2047360-12
SPM200 Loudspeaker Pole Mount	P/N 2035170-01

Disclaimer

Since we are always striving to make our products better by incorporating new and improved materials, components, and manufacturing methods, we reserve the right to change these specifications at any time without notice.

The "Running Man" figure is a registered trademark of LOUD Technologies Inc.

All other brand names mentioned are trademarks or registered trademarks of their respective holders, and are hereby acknowledged.

©2017 LOUD Technologies Inc.
All Rights Reserved.

Thump12A Loudspeaker Dimensions

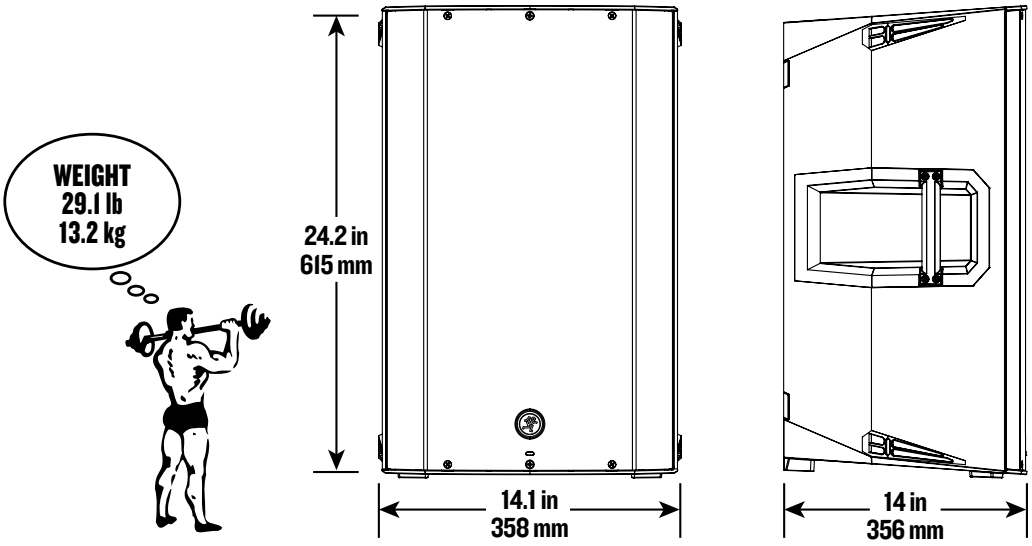

Thump15A Loudspeaker Dimensions

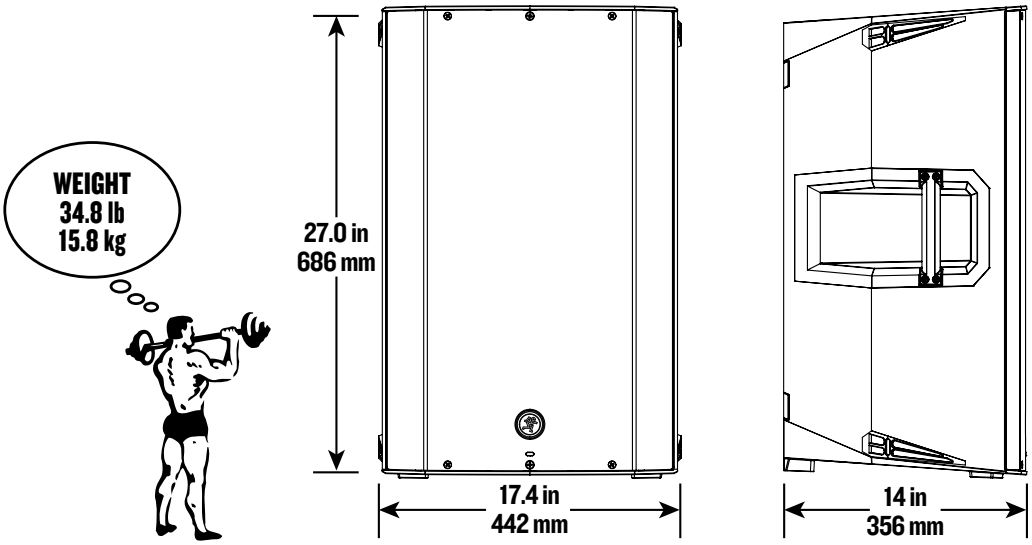

Thump12A and Thump15A Loudspeaker Frequency Response Legend

Music Speaker Mode – This mode is full range, but focuses on increased bass and brilliant high frequencies. This is the place to start for most DJ / music playback applications.

Live Speaker Mode – This mode features a low frequency roll-off to get rid of unwanted thumps and adds boost and sparkle to mid-range and high frequencies. This plug-and-play mode is perfect for singer-songwriters.

Monitor Speaker Mode – This mode features a low frequency roll-off and a reduction around 2 kHz to ensure maximum gain before feedback in monitor applications.

Sub Speaker Mode – This mode rolls off the low end of the ThumpA loudspeaker to match properly with the Thump18S subwoofer.

Thump12A Loudspeaker Frequency Response

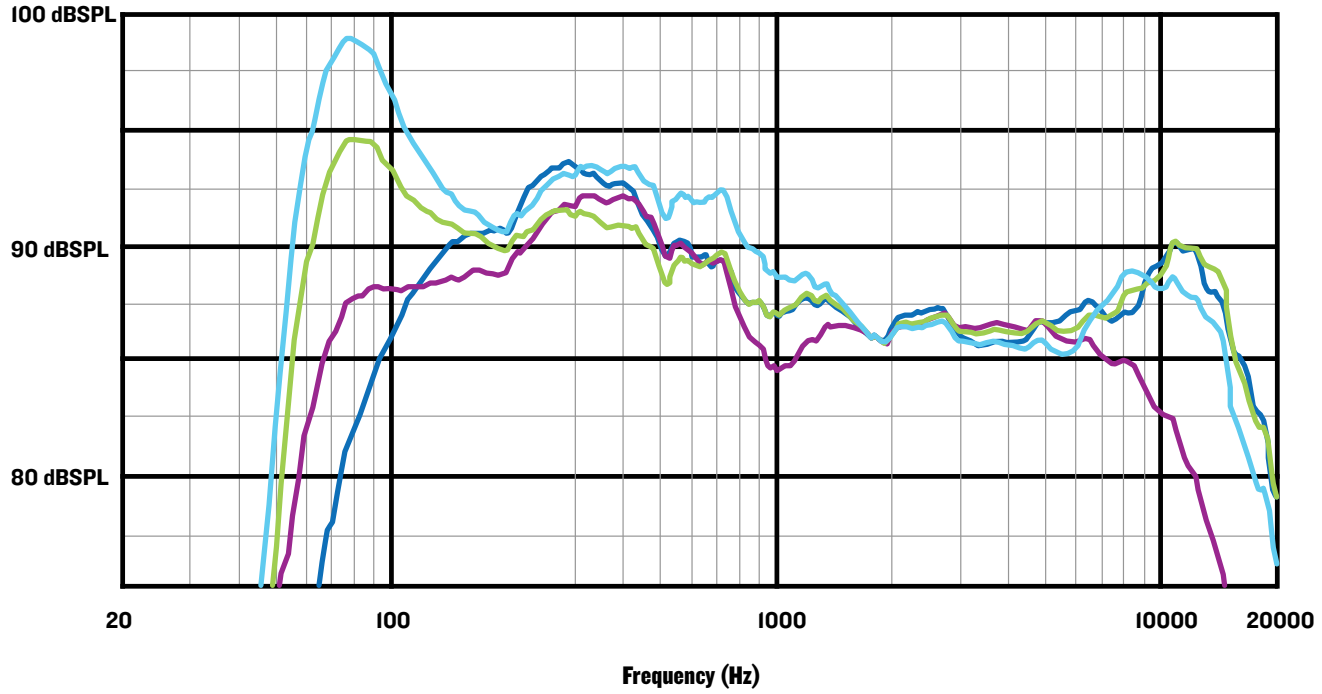

Thump15A Loudspeaker Frequency Response

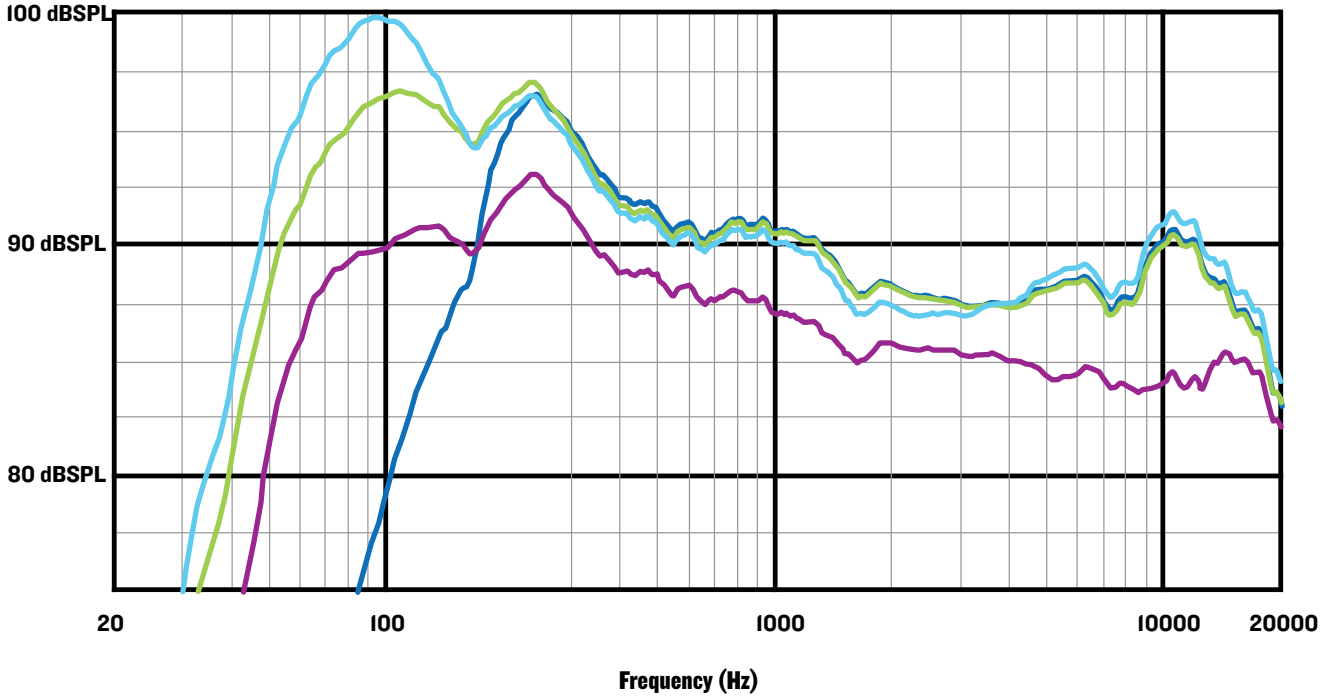

Thump12A / Thump15A Loudspeakers Block Diagram

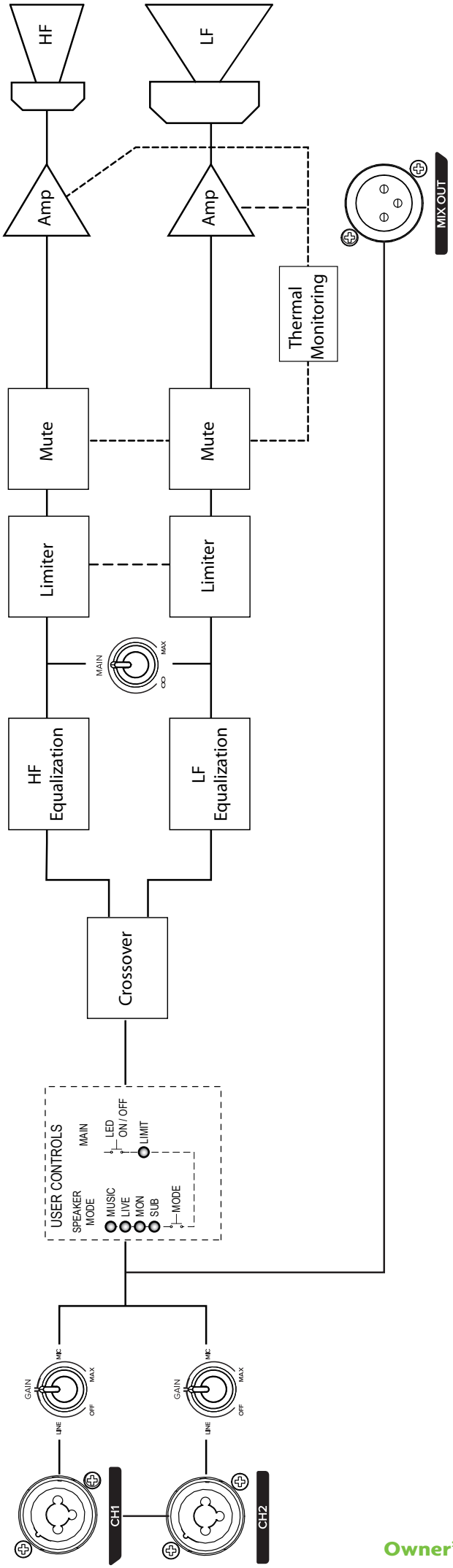

Limited Warranty

Please keep your sales receipt in a safe place.

This Limited Product Warranty ("Product Warranty") is provided by LOUD Technologies Inc. ("LOUD") and is applicable to products purchased in the United States or Canada through a LOUD-authorized reseller or dealer. The Product Warranty will not extend to anyone other than the original purchaser of the product (hereinafter, "Customer," "you" or "your").

For products purchased outside the U.S. or Canada, please visit www.mackie.com to find contact information for your local distributor, and information on any warranty coverage provided by the distributor in your local market.

LOUD warrants to Customer that the product will be free from defects in materials and workmanship under normal use during the Warranty Period. If the product fails to conform to the warranty then LOUD or its authorized service representative will at its option, either repair or replace any such nonconforming product, provided that Customer gives notice of the noncompliance within the Warranty Period to the Company at: www.mackie.com or by calling LOUD technical support at 1.800.898.3211 (toll-free in the U.S. and Canada) during normal business hours Pacific Time, excluding weekends or LOUD holidays. Please retain the original dated sales receipt as evidence of the date of purchase. You will need it to obtain any warranty service.

For full terms and conditions, as well as the specific duration of the Warranty for this product, please visit www.mackie.com.

The Product Warranty, together with your invoice or receipt, and the terms and conditions located at www.mackie.com constitutes the entire agreement, and supersedes any and all prior agreements between LOUD and Customer related to the subject matter hereof. No amendment, modification or waiver of any of the provisions of this Product Warranty will be valid unless set forth in a written instrument signed by the party to be bound thereby.

Need help with the loudspeaker?

- **Visit www.mackie.com/support to find: FAQs, manuals, addendums, and other documents.**
- **Email us at: www.mackie.com/support-contact**
- **Telephone 1-800-898-3211 to speak with one of our splendid technical support chaps (Monday through Friday, normal business hours, Pacific Time).**

16220 Wood-Red Road NE
Woodinville, WA 98072 • USA
Phone: 425.487.4333
Toll-free: 800.898.3211
Fax: 425.487.4337
www.mackie.com